ELCAN OPTICAL SIGHT

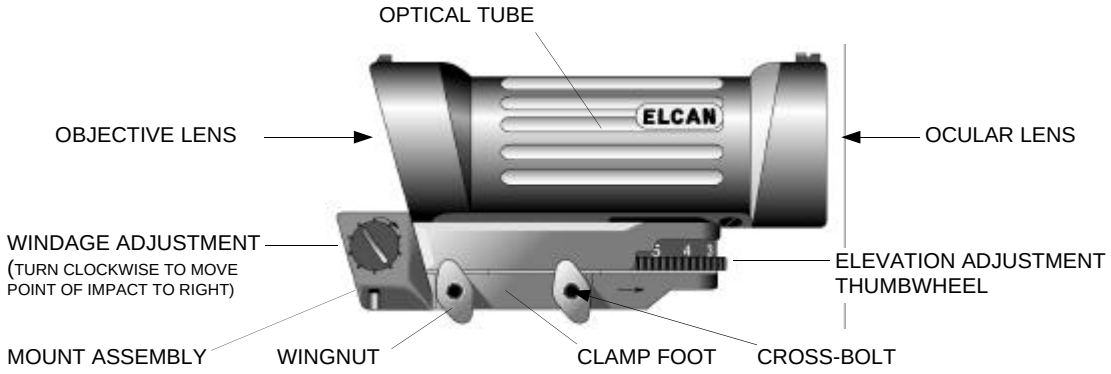

ELCAN TERMINOLOGY

ELCAN mounting procedure

The ELCAN Optical Sight is designed to fit on weapon systems that incorporate MIL-STD-1913 “Picatinny” mounting rails. Follow the following mounting procedure steps:

1) Loosen both wingnuts on left side of sight by turning counter-clockwise until slight resistance is felt. The clamping wingnuts are captive on the cross-bolts and no attempt must be made to unscrew them past the point of their initial resistance.

2) Turn the sight upside-down and observe the general location of clamping cross-bolts. When mounting, the clamping cross-bolts must align with the slots in the MIL-STD-1913 receiver or “Picatinny” base.

3) Choose the desired position for the sight on the receiver, and “hook” the clamp foot on the left side of the sight under the left side overhang of the receiver base. Check once again to ensure the crossbolts are aligned with the cross-slots.

4) “Roll” the sight over so the right side of the ELCAN mount clears the right edge of the receiver base.

5) When the Sight is located in the desired position, gently push the sight forward until the crossbolts touch the forward edge ot their respective cross-slots.

6) Snug the wingnuts to obtain evenly-distributed initial clamping pressure.

7) Check for appropriate receiver position to obtain correct eye-relief. This varies from user-to-user according to physical stature and personal preference. Be sure to obtain a full circular sight picture.

8) When satisfied with receiver position, tighten each wingnut with **moderately-firm** finger pressure. Do not over-tighten! **The wingnuts must not be tightened with pliers or wrenches.**

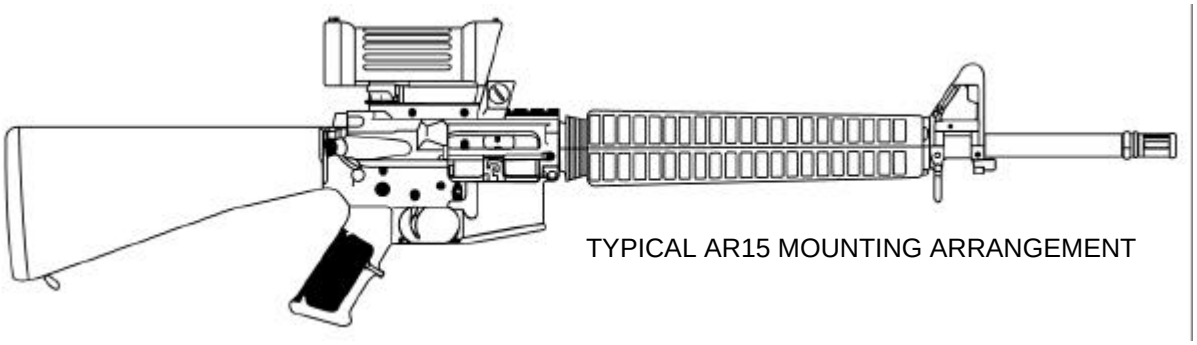

ELCAN zeroing procedure

GENERAL:

In zeroing mode, each "click" of the windage or elevation dial will result in approximately 1 inch of impact change at 100 meters.

The following procedure for zeroing the ELCAN Optical Sight was devised by the manufacturer. The procedure is intended to provide a point-blank zero from data gained at 25 meters. It is recommended that actual long range zero be established at a minimum of 300 meters.

The objective of zeroing is to make the impact point the same as the point of aim. While it is necessary to adjust the point of aim for wind and very long ranges, a point-blank zero can be established. This allows large targets out to approximately 275 meters to be successfully engaged with no aim point adjustment necessary. Establishing this point-blank zero is carried out at 25 meters, using the attached target. The reason for this is to have the zeroing targets conveniently close for examination and analysis during the initial zeroing process.

The standard 25 meter zeroing target has a 4 centimeter circle is inscribed at center of mass. The circle is the aim point for zeroing. The whole target is divided into 4 quadrants. Each one represents one set of elevation and windage adjustments.

The 25 meter zeroing target allows quick and accurate estimation of adjustment for both windage and elevation. After a group of 3 shots has been fired and the range has been declared safe, retrieve the target.

Mark the group center and locate the nearest intersection of a horizontal and vertical line. Sight adjustment information for changes in elevation is found by moving right to the margin. Windage adjustment information is found by moving to the margin at the top of the target.

The numbers in the margins indicate the number of 0.25 mil clicks of adjustment required. (One mil equals 3.375 minutes of angle, thus 0.25 mil=0.8438 MOA. This equals approximately one inch at 100 metres) At 25 metres, to move one square in elevation requires 2 clicks of adjustment on the range adjustment control. To move one square in windage requires 2 clicks of adjustment on the windage adjustment screw. The notes in fine print in the margins indicate direction of rotation required for the elevation and windage controls to adjust the fall-of-shot to the target center.

In the process of zeroing, the aim must be consistently at the center of mass, ie: the point of the reticle just touching the bottom edge of the black half-circle. Obviously, each shooter will estimate this sight picture in his own way: for example, some will aim above the actual center and others below. What is important is to aim **consistently** at the center of mass as perceived. The zeroing adjustments will move the shot group to the center of the target.

SUMMARY:

a) Set the range dial to 4.

b) Fire a 3 shot group at the 25 meter target.

c) Determine and mark the center of the 3 shot group with an`X".

d) Using the shot group center, determine the required sight adjustments in elevation and in windage to move the fall of shot to the center of the 4 centimeter circle.

ELCAN zeroing procedure continued

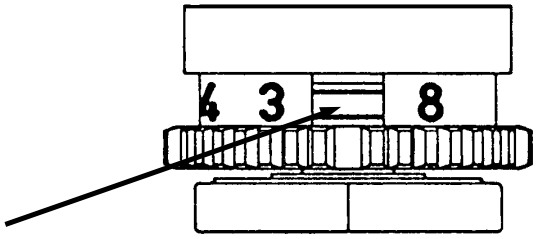

LOCK
engaged in lower position
disengaged in upper position

Zeroing Correction Steps

1) Turn the range drum clockwise until the port (LOCK) lines up with the index line on the rear base of the sight mount.

2) Flip the range zeroing lock up to the unlocked position. This permits the unnumbered thumbwheel on the range control to turn while the numbered dial remains on the port (LOCKED) position.

3) Turn the unnumbered range drum the number of clicks necessary to center the group onto the center of the target.

4) Flip the range zeroing lock down to lock the range adjustment drums together.

5) Return the range dial to **4** before firing the next group.

The adjustment steps **(1)** through **(5)** are repeated after each 3-shot group has been fired in order to apply the needed corrections. To adjust windage 2 clicks right, for example, the windage adjustment screw is turned 2 clicks clockwise.

After the weapon has been zeroed using the 25 meter target, the weapon should then be fired at a range target at 100 or 200 meters. Adjustments to bring the center of the group to the center of the target are as described above, but one click will now represent roughly 25mm of group movement for each 100 metres of range. Check the zeroing by firing a final group. The sight is now zeroed. If a target presents itself at 300 meters or 500 meters, the range dial should be turned to the appropriate number and the tip of the post placed on the desired impact point on the target. No other elevation corrections are required, but the shooter may have to hold off slightly to correct for wind speed and direction that day. The ELCAN windage screw is designed for establishing an initial wind zero and is not designed to make windage corrections on a regular basis during shooting practice.

ELCAN care and maintenance

With the exception of lens cleaning, the ELCAN Optical Sight is designed to require no user maintenance. Lenses may require periodic cleaning with lens paper (available at camera or optical shops). No other alteration or maintenance of the sight is required and disassembly of the mount or attempts to remove the purging plug will result in voiding of the warranty.

The beta light assembly is designed to offer low-level illumination of the reticle tip in near-dark conditions. It is purposely dim to avoid signature detectable by NVD's (Night Vision Devices) as well as to prevent disruption to the users natural acclimatization to low light levels. All beta light assemblies have a useable life of approximately 10-12 years.

Users should avoid leaving the sight pointed directly into the sun, as the lenses can concentrate the suns rays and damage the reticle masking.

ELCAN **Reticle Pattern**

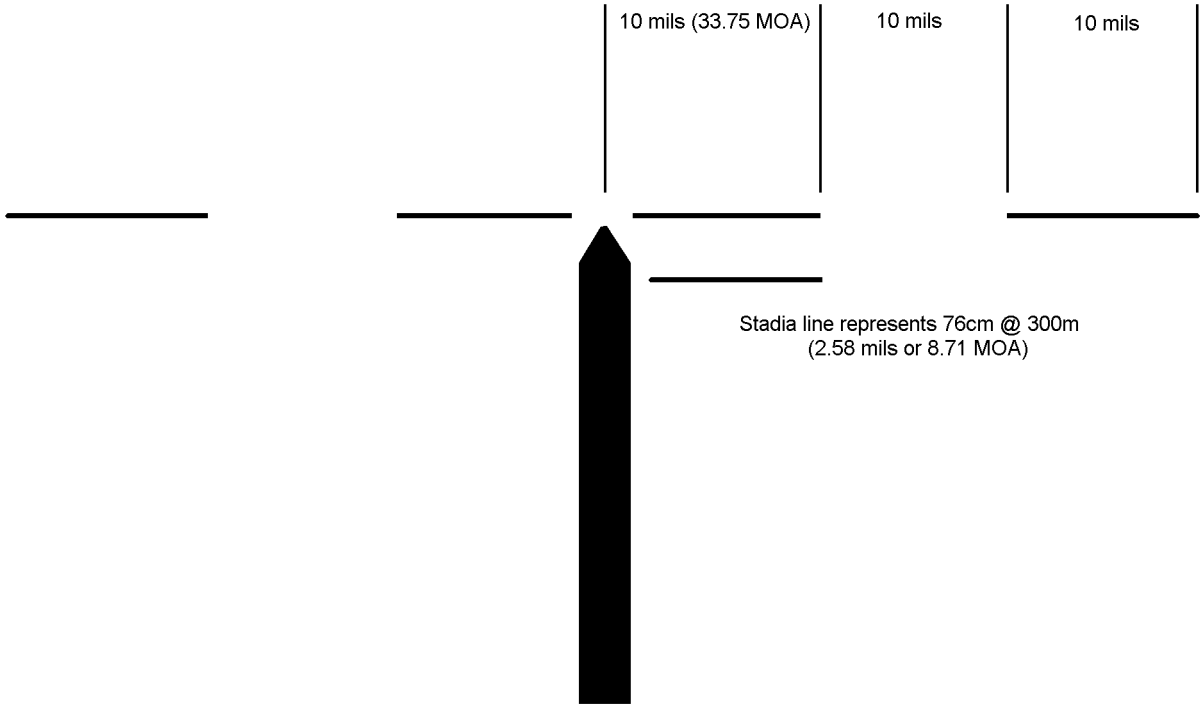

ELCAN 25 meter zeroing target

(turn windage screw clockwise to correct) WINDAGE ZEROING DETENTS (turn windage screw counterclockwise to correct)

12 10 8 6 4 2 0 2 4 6 8 10 12

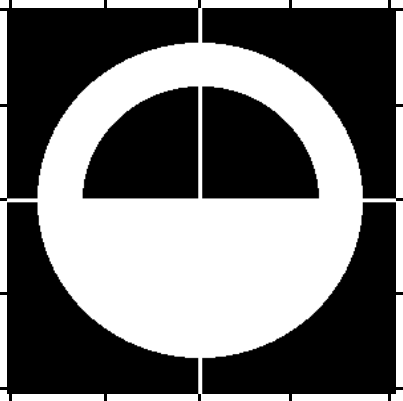

(turn drum left to correct impact)

ELEVATION ZEROING DETENTS

(turn drum right to correct impact)

1) Place target at 25 meters.
2) Set range dial to 400 meters, fire a 3 shot group.
3) Return dial to LOCK position.
4) Disengage lock and make necessary adjustments.
5) Engage lock.
6) Return setting to 400 meters and confirm.
7) Repeat if necessary.